RSB-08S

Rack Shell Birch - 8 Space - 15.5" Rackable Depth

grundorf corp™

www.grundorf.com · (712)-322-3900

#	QTY	PART NUMBER	DESCRIPTION
1	2	41-008	RACK RAIL-8 SPACE
2	1	83-008	BADGE - GRUNDORF ORIGINAL

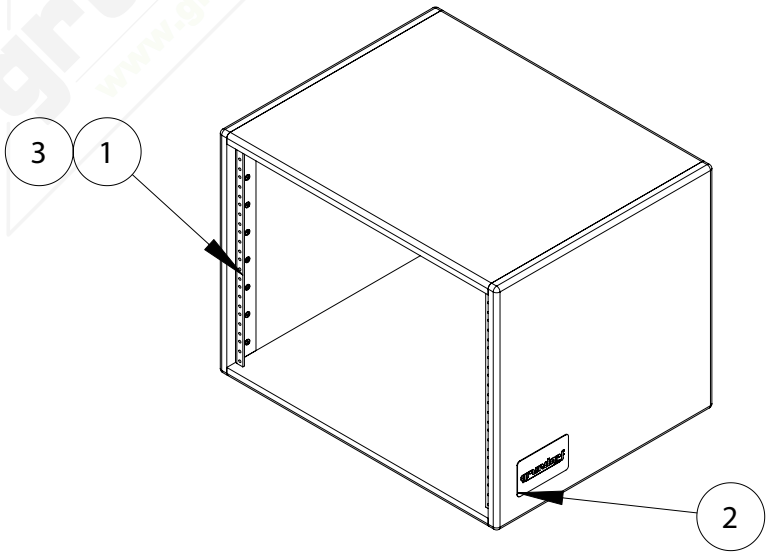

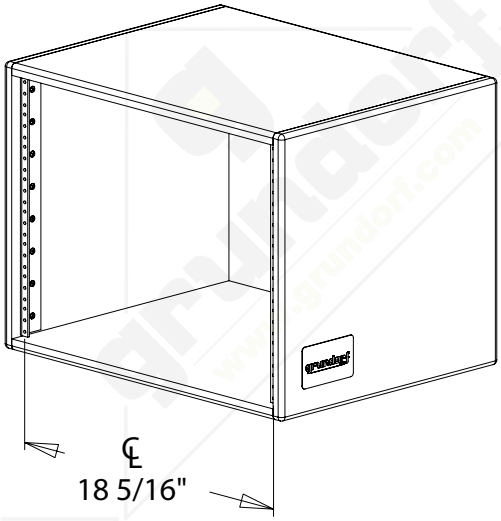

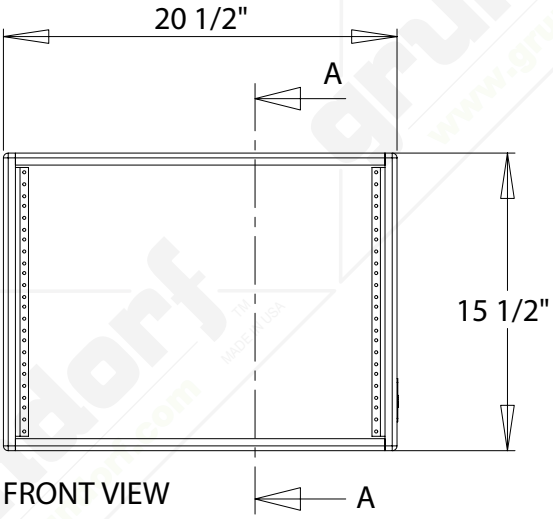

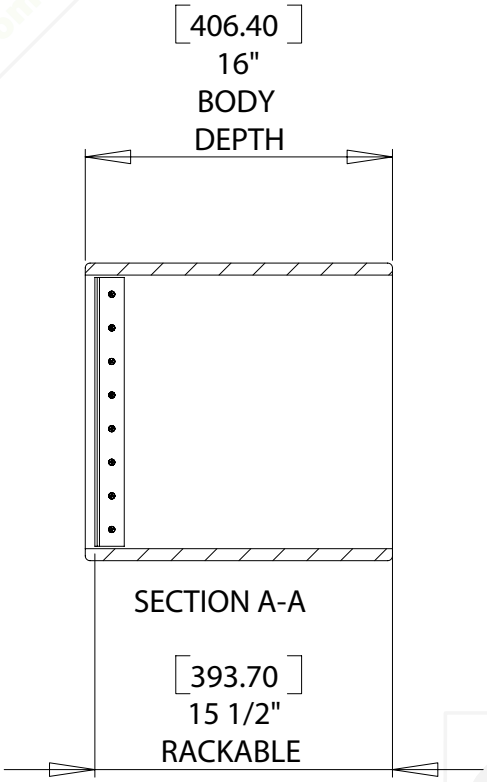

© 2008 GRUNDORF CORPORATION.
PROPRIETARY AND CONFIDENTIAL THE INFORMATION CONTAINED IN THIS DRAWING IS THE SOLE PROPERTY OF GRUNDORF CORPORATION.

8/19/2008